FDOT Transportation Alternatives Set-Aside Program

FUNDING APPLICATION

Submittal Date:

APPLICANT INFORMATION

Agency/Organization Name:			
Agency Contact Name:	**Title:**		
Mailing Address:	**City:**	**State:** FL	**Zip Code:**
County:	**MPO/TPO (if applicable):**		
Telephone:	**Email Address:**		

CERTIFICATION OF PROJECT SPONSOR/IMPLEMENTING AGENCY SUPPORT:

Certification of project sponsor/implementing agency support is attached. ❑ Yes *(Required)*

PROJECT TYPE: ❑ **Infrastructure** ❑ **Non-infrastructure**

FDOT requires locally administered infrastructure projects be implemented by a LAP certified agency; Non-infrastructure projects do not require LAP certification. If the project applicant intends to administer the project but is not LAP certified at the time of application submittal, they may seek project-specific certification prior to project authorization if their application is selected, or they may partner with a LAP certified agency or with FDOT to serve as the project sponsor and implementing agency. Non-profit organizations are not eligible for LAP certification.

FOR INFRASTRUCTURE PROJECTS ONLY - APPLICANT'S LOCAL AGENCY PROGRAM (LAP) CERTIFICATION STATUS

- ❑ Currently fully LAP Certified / Year of Certification:
- ❑ Not LAP Certified but will seek project-specific certification
- ❑ Not LAP Certified but project will be administered by the FDOT District
- ❑ Not LAP Certified but have secured a LAP Sponsor/Implementing Agency as identified below:

LAP Sponsor/Implementing Agency Name:			
LAP Sponsor/Implementing Agency Contact Name:	**Title:**		
Mailing Address:	**City:**	**State:** FL	**Zip Code:**
Telephone:	**Email Address:**		

PROJECT INFORMATION

PROJECT NAME/TITLE:

ELIGIBLE TRANSPORTATION ALTERNATIVES PROJECT CATEGORY:

Please check the one Transportation Alternatives eligible project category that the proposed project will address. Checking more than one category does not ensure or increase eligibility. Additional guidance on eligible project activities is included in Appendix B of the FDOT TA Program Guidance.

1. ❑ Construction, planning and design of on and off-road facilities for bicyclists, pedestrians, and other forms of nonmotorized transportation (pedestrian and bicycle facilities)
2. ❑ Construction, planning and design of infrastructure-related projects/systems to provide safe routes for non-drivers including children, older adults, individuals with disabilities (safe routes for non-drivers)
3. ❑ Conversion and use of abandoned railroad corridors for non-motorized use
4. ❑ Construction of turnouts, overlooks, and viewing areas
5. ❑ Inventory, control or removal of outdoor advertising
6. ❑ Historic preservation and rehabilitation of historic transportation facilities
7. ❑ Vegetation management practices in transportation rights of way
8. ❑ Archaeological activities related to impacts from transportation projects
9. ❑ Environmental mitigation activities
10. ❑ Safe Routes to School

***NOTE:** *Safe Routes to School (SRTS) funding under Transportation Alternatives is separate from the FDOT SRTS Program; however, if FDOT SRTS Program funds are to be used on any phase of the project then the project will need to comply with the Florida SRTS program requirements. For more information, visit https://www.fdot.gov/safety/2A-Programs/Safe-Routes.shtm.*

PROJECT LOCATION:

Roadway name:*		
❑ **On-State System Road** (State Roadway)	❑ **Off-State System Road** (Local Roadway)	**Roadway number:** (i.e. US, SR, CR, etc., if applicable)

***NOTE:** *For off-road/trail projects please indicate adjacent roadway*

PROJECT LIMITS:

If project has various locations (e.g. city-wide), include attachments specifying each termini and project length.

South or West Termini: Street Name/Mile Post/Other	**North or East Termini:** Street Name/Mile Post/Other
Project Length (in miles):	
Attachment included? ❑ Yes ❑ No	
A location map with aerial view is attached to this application. ❑ Yes *(Required)* *Label important features, roadways, etc. to clearly locate and show the boundaries of the project.*	

PROJECT DESCRIPTION:

Brief Description (1,000 character limit) (*e.g. planning, design and construction of a sidewalk along Sample Road)*

Detailed Scope of Work:

A detailed scope of work is attached. ❑ Yes *(Required)*

Clearly describe the existing conditions and the proposed project in detail, including specifics on the major items of work (e.g. width of sidewalks or trails, materials to be used, etc.), the purpose and need for this project, and the desired improvements.

Conceptual or design plans are attached. ❑ Yes ❑ No

Typical Section drawings are attached. ❑ Yes ❑ No

Other attachment (e.g. studies, documentation to support the project). ❑ Yes ❑ No

If yes, please describe (250 character limit):

PUBLIC INVOLVEMENT(500 character limit for each question below):

Has the applicant received input from stakeholders? Briefly explain: ❑ Yes ❑ No

Have public information or community meetings been held? ❑ Yes ❑ No

If yes, please provide a brief description and attach supporting documentation:

Describe public and private support for the project *(e.g. petitions, endorsements, resolutions, letters of support):*

Is the project within limits of wetlands, contamination/hazardous waste areas or endangered/threatened species? ❑ Yes ❑ No

If Yes, specify and provide documentation:

Is environmental permitting required? ❑ Yes ❑ No

If Yes, specify and provide documentation:

Provide any additional project specific information that should be considered:

PROJECT IMPLEMENTATION

Please indicate the project phases included in this funding request:

- ❑ Planning activities
- ❑ Project Development and Environment Study (PD&E)
- ❑ Preliminary Engineering/Final Design
- ❑ Right-of-Way (ROW)
- ❑ Construction
- ❑ Construction Engineering and Inspection activities (CEI)

Please indicate who will execute the project phases identified for this project:*

Planning	PD&E	Preliminary Engineering/ Final Design	ROW	Construction	CEI
❑ Implementing agency staff	N/A	❑ Implementing agency staff	N/A	❑ Implementing agency staff	❑ Implementing agency staff
❑ Consultant	❑ Consultant	❑ Consultant	❑ Consultant	❑ Consultant	❑ Consultant
❑ FDOT	❑ FDOT	❑ FDOT	❑ FDOT	❑ FDOT	❑ FDOT
❑ Not applicable	❑ Not applicable	❑ Not applicable	❑ Not applicable	❑ Not applicable	❑ Not applicable

****NOTE:** *Local agencies are not eligible to be certified in PD&E and/or ROW (Refer to FDOT LAP Manual Chapters 11 and 12).*

Is this project related to other FDOT funded phases that are complete, underway, or in FDOT's 5-year Work Program?

❑ Yes ❑ No

If Yes, please describe. If previous phases of this project were constructed as LAP projects, please provide the associated FDOT Project Number (i.e. FPID/FMN numbers) (500 character limit):

Is there a proposed maintenance plan for when the project is complete? ❑ Yes ❑ No
If yes, please provide a brief description and attach supporting documentation as appropriate (500 character limit):

PROJECT RIGHT-OF-WAY / EASEMENT REQUIREMENTS

Is right-of-way acquisition proposed? ❑ Yes ❑ No
If yes, describe existing right-of-way (ROW) ownerships along the project, including when the ROW was obtained and how ownership is documented (i.e., plats, deeds, prescriptions, easements) (500 character limit). Attach ROW documentation as appropriate.

Also describe proposed acquisition including timeline, expected fund source, limitations on fund use or availability, and who will acquire and retain ownership of proposed right-of-way (500 character limit):

Will temporary construction easements be required? ❑ Yes ❑ No
If Yes, please describe (500 character limit):

PROJECT COST ESTIMATE AND FUNDING REQUEST

ESTIMATED PROJECT COST:

A detailed project cost estimate is attached. ❑ Yes *(Required)*

Provide a summary of the estimated cost for the work being proposed, indicating local fund allocation as appropriate.

Project Phase	TA funds	Local funds	Total Cost
Planning Activities	$	$	$
Project Development & Environmental Study (PD&E)	$	$	$
Design Costs/Plan Preparation	$	$	$
Environmental Assessment (s) associated with the design phase	$	$	$
Permits associated with the design phase (including application fees, mitigation and permit acquisition work)	$	$	$
Right-of-Way	$	$	$
Construction	$	$	$
Construction Engineering and Inspection Activities (CEI)	$	$	$
Other costs* (please describe)	$	$	$
TOTAL ESTIMATED PROJECT COST	**$**	**$**	**$**
PERCENT OF TOTAL PROJECT COST			**100%**

**FDOT does not allow programming for contingency costs. Any contingency costs should be accounted for using local funds.*

Indian Trail Improvement District 140th Avenue North and 61st Street North Multi-Use Trail Project

Transportation Alternatives

Description

Proposed 8-foot-wide multi-use trail. (See typical section exhibits).

1. **140th Avenue North** (0.9 miles) from Orange to 61st Street North within a 60/70-foot R/W.

2. **61st Street North** (0.9 miles) from 140th Avenue North to the M-1 Canal within a 60/70-foot R/W.

Total project length:
9,500 feet (1.8 miles)

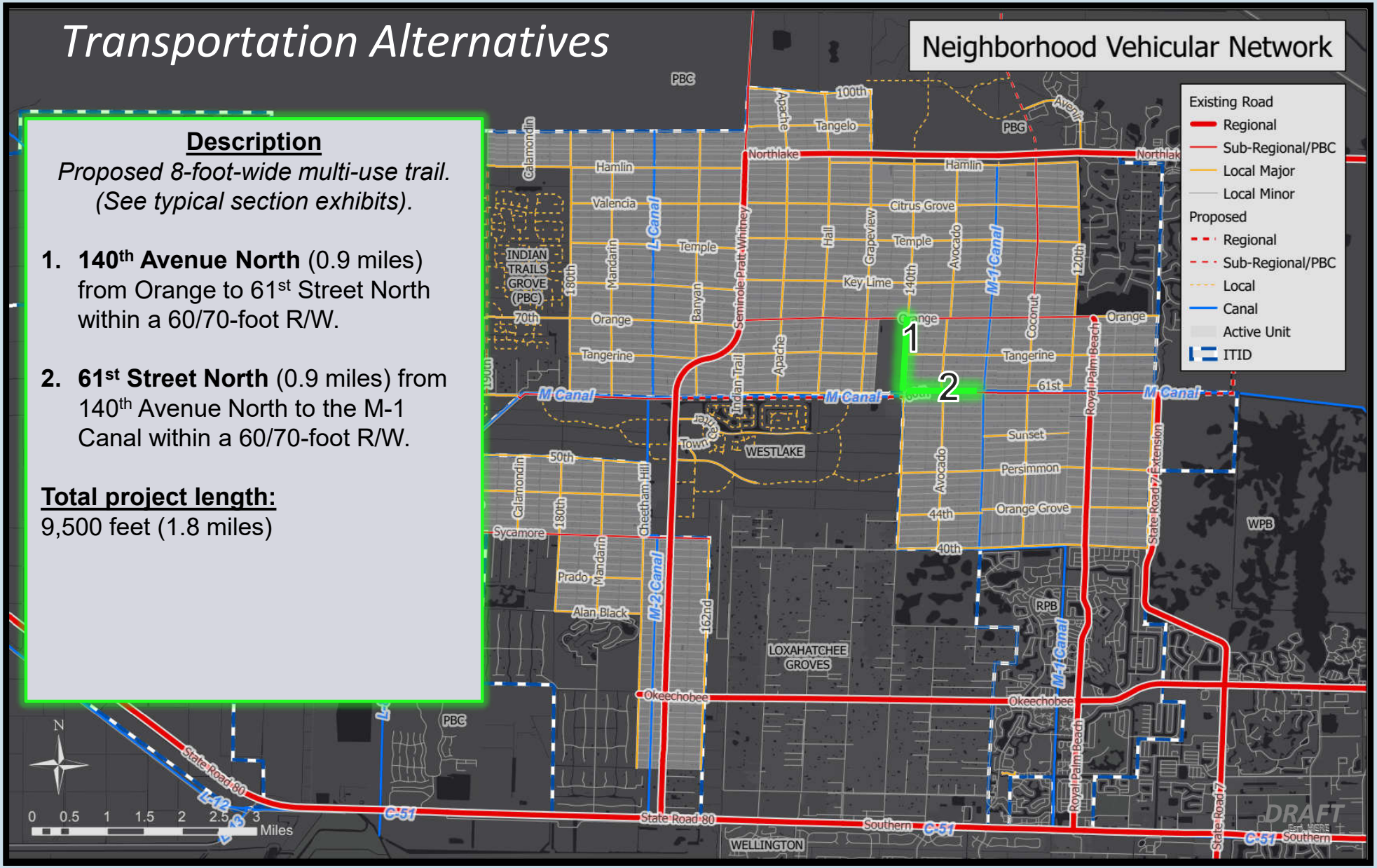

JANUARY 17, 2023

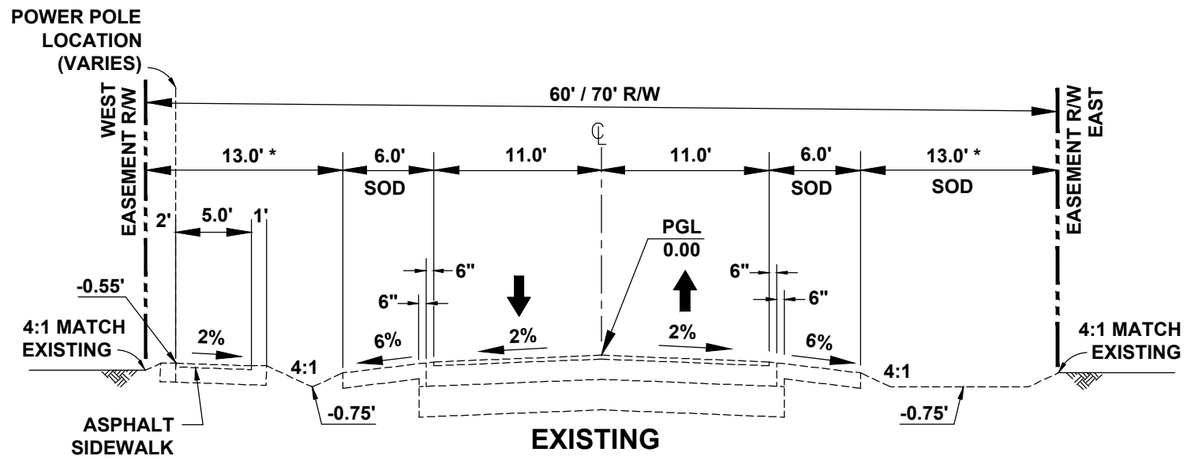

EXISTING

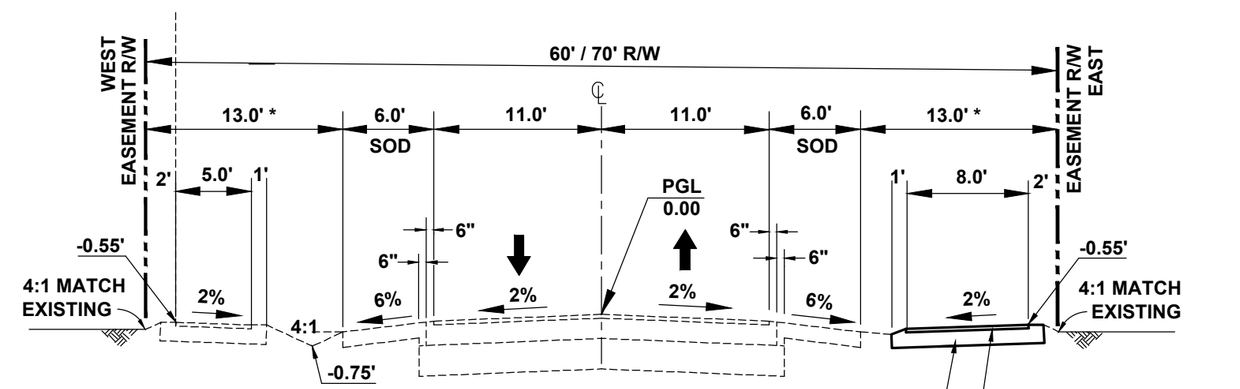

PROPOSED

MULTI-USE TRAIL - COMPACTED SURFACE (GRAVEL/BASE ROCK) (SOD OPTIONAL)

EXISTING FORCEMAIN LOCATION (VARIES)

12" STABILIZED SUBGRADE (LBR40)

EXISTING WATERMAIN LOCATION (VARIES)

140th AVENUE NORTH (north-south) from Orange Boulevard to 61st Street North (0.9 Miles)

TYPICAL SECTION
60' RIGHT OF WAY

NOTE:

1. ALL SIDEWALKS WITHIN PROJECT LIMITS SHALL BE ADA COMPLIANT. ANY DEFICIENCIES OR OBSTRUCTIONS SHALL BE REMEDIED WITH THIS PROJECT.
2. ROOT BARRIER REQUIRED FOR ALL TREES ADJACENT TO SIDEWALK.
3. CANAL CULVERTS NOT INCLUDED IN THIS PROJECT'S COST ESTIMATE.
4. DRIVEWAY CULVERT ADJUSTMENTS SHALL BE IN COMPLIANCE WITH INDIAN TRAIL LATEST STANDARDS.
5. PATTERNED PAVEMENT INCLUDED AT EACH PAVED INTERSECTION CROSSWALK.
6. STORM-WATER PIPE AND INLETS NECESSARY FOR DRAINAGE.
7. THE WIDTH OF RIGHT-OF-WAY VARIES FROM 60 TO 70 FEET THUS THE SOD AND SWALE AREA MAY BE WIDER TO ACCOMMODATE DRAINAGE.

DRAFT 1/17/23

THIS DOCUMENT, TOGETHER WITH THE CONCEPTS AND DESIGNS PRESENTED HEREIN, AS AN INSTRUMENT OF SERVICE, IS INTENDED ONLY FOR THE SPECIFIC PURPOSE AND CLIENT FOR WHICH IT WAS PREPARED. REUSE OF AND IMPROPER RELIANCE ON THIS DOCUMENT WITHOUT WRITTEN AUTHORIZATION AND ADOPTION BY CAPTEC ENGINEERING, INC. SHALL BE WITHOUT LIABILITY TO CAPTEC ENGINEERING INC.

CAPTEC Engineering, Inc.
Civil Engineering Professionals
301 NW Flagler Ave, Ste. 201
Stuart, Florida 34994
Phone: (772) 692-4344
Fax: (772) 692-4341
Engineering Business No. EB-0007657

DATE: 2/11/21
DRAWN BY: ADO
DESIGNED BY: ADO
CHECKED BY: JWC
PROJECT No.: 1522.025
HORZ. SCALE: 1" = 10'
VERT. SCALE: 1" = 10'
CADD FILE: Typical Section

NO.	DATE	BY	REVISIONS
---	---	---	
---	---	---	
---	---	---	

SCALE VERIFICATION
0 — 0.5
SOLID BAR IS EQUAL TO 0.5 INCH ON ORIGINAL DRAWING. ADJUST ALL SCALED DIMENSIONS ACCORDINGLY

INDIAN TRAIL IMPROVEMENT DISTRICT
TRANSPORTATION ALTERNATIVES PROGRAM
PALM BEACH COUNTY, FLORIDA

140TH AVENUE NORTH
TYPICAL SECTION
60/70 FOOT RIGHT OF WAY

Joseph W. Capra
301 N.W. Flagler Ave.
Stuart, Florida 34994
P.E. No. 37638

Printed Date:

JOB No.: 1522.025
SHEET 1 OF 2

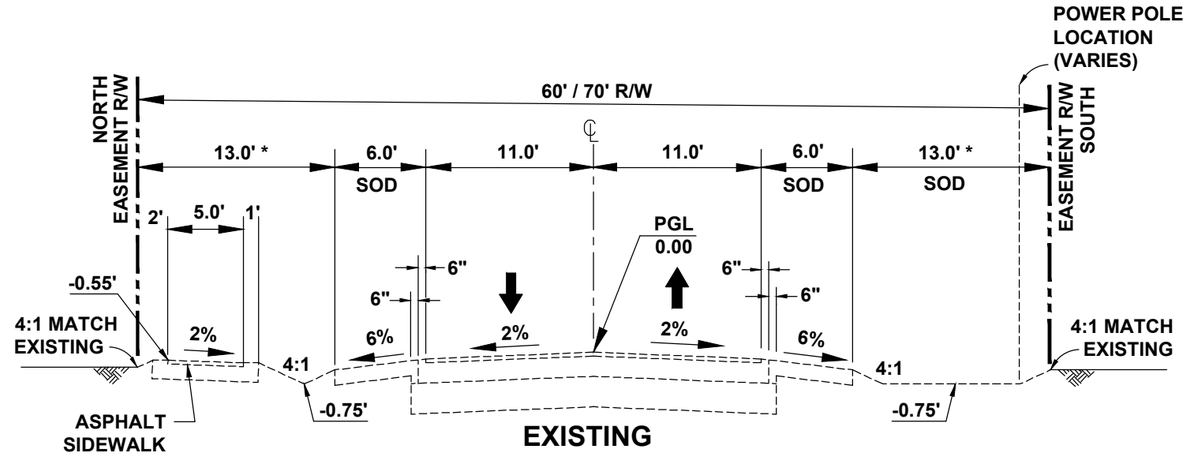

EXISTING

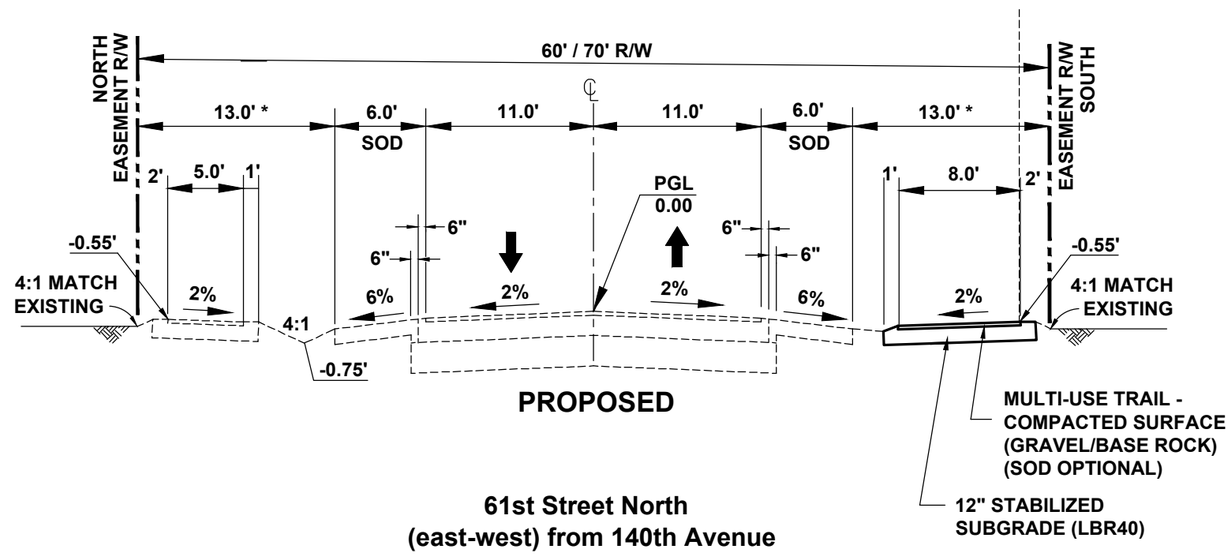

PROPOSED

NOTE:

1. ALL SIDEWALKS WITHIN PROJECT LIMITS SHALL BE ADA COMPLIANT. ANY DEFICIENCIES OR OBSTRUCTIONS SHALL BE REMEDIED WITH THIS PROJECT.
2. ROOT BARRIER REQUIRED FOR ALL TREES ADJACENT TO SIDEWALK.
3. CANAL CULVERTS NOT INCLUDED IN THIS PROJECT'S COST ESTIMATE.
4. DRIVEWAY CULVERT ADJUSTMENTS SHALL BE IN COMPLIANCE WITH INDIAN TRAIL LATEST STANDARDS.
5. PATTERNED PAVEMENT INCLUDED AT EACH PAVED INTERSECTION CROSSWALK.
6. STORM-WATER PIPE AND INLETS NECESSARY FOR DRAINAGE.
7. THE WIDTH OF RIGHT-OF-WAY VARIES FROM 60 TO 70 FEET THUS THE SOD AND SWALE AREA MAY BE WIDER TO ACCOMMODATE DRAINAGE.

61st Street North
(east-west) from 140th Avenue
North to the M-1 Canal
(0.9 Miles)

TYPICAL SECTION
60' RIGHT OF WAY

DRAFT 1/17/23

THIS DOCUMENT, TOGETHER WITH THE CONCEPTS AND DESIGNS PRESENTED HEREIN, IS AN INSTRUMENT OF SERVICE, IS INTENDED ONLY FOR THE SPECIFIC PURPOSE AND CLIENT FOR WHICH IT WAS PREPARED, REUSE OF AND IMPROPER RELIANCE ON THIS DOCUMENT WITHOUT WRITTEN AUTHORIZATION AND ADOPTION BY CAPTEC ENGINEERING, INC. SHALL BE WITHOUT LIABILITY TO CAPTEC ENGINEERING INC.

301 NW Flagler Ave. Ste. 201
Stuart, Florida 34994
Phone: (772) 692-4344
Fax: (772) 692-4341
CAPTEC Engineering, Inc.
Civil Engineering Professionals
Engineering Business No. EB-0007657

DATE: 2/11/21
DRAWN BY: ADO
DESIGNED BY: ADO
CHECKED BY: JWC
PROJECT No.: 1522.025
HORZ. SCALE: 1" = 10'
VERT. SCALE: 1" = 10'
CADD FILE: Typical Section

NO.	DATE	BY	REVISIONS
---	---	---	
---	---	---	
---	---	---	

SCALE VERIFICATION
0 — 0.5
SOLID BAR IS EQUAL TO 0.5 INCH ON ORIGINAL DRAWING, ADJUST ALL SCALED DIMENSIONS ACCORDINGLY

INDIAN TRAIL IMPROVEMENT DISTRICT
TRANSPORTATION ALTERNATIVES PROGRAM
PALM BEACH COUNTY, FLORIDA

61ST STREET NORTH
TYPICAL SECTION
60/70 FOOT RIGHT OF WAY

Joseph W. Capra
301 N.W. Flagler Ave.
Stuart, Florida 34994
P.E. No. 37638

Printed Date:

JOB No.: 1522.025
SHEET 2 OF 2

Future Mobility "Needs" Improvements (with street details)

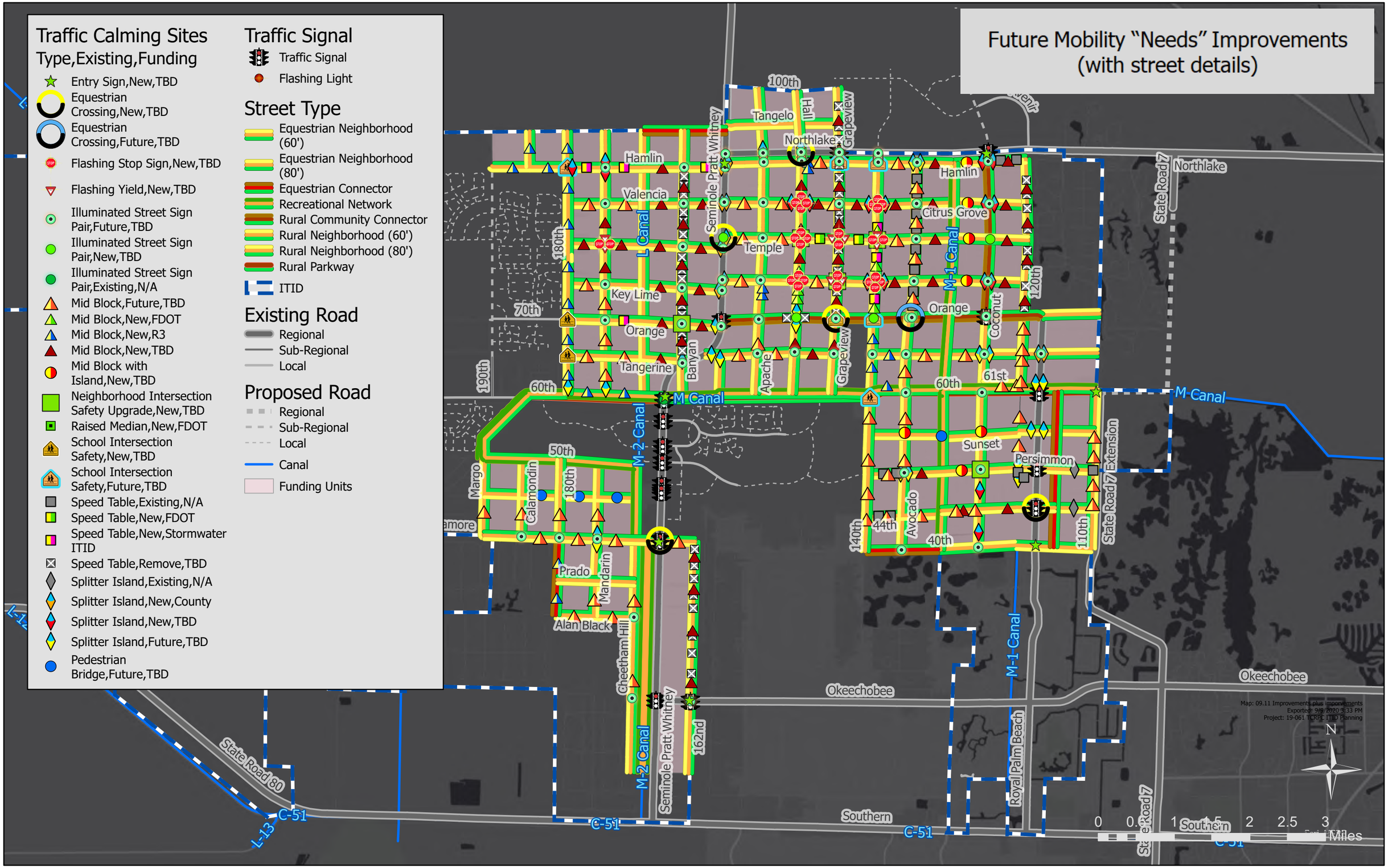

ENGINEERS COST ESTIMATE

Project Description: INDIAN TRAIL IMPROVEMENT DISTRICT 140TH AVENUE NORTH AND 61ST STREET NORTH MULTI-USE TRAIL (1.8 MILES)

FM#

TRANSPORTATION ALTERNATIVES

		FHWA Participating				FHWA non-participating (Local funds)					
Pay Item Number*	Pay Item Description*	Quantity	Unit	Engineer's Unit Cost	Engineer's Subtotal Cost	Quantity	Unit	Engineer's Unit Cost	Engineer's Subtotal Cost	Total Quantity	Total Engineer's Cost
101-1	Mobilization (Includes root barrier)	1	LS	$ 30,000.00	$ 30,000.00				$ -	1	$ 30,000.00
102-1	Maintenance of Traffic	90	DA	$ 1,000.00	$ 90,000.00				$ -	90	$ 90,000.00
104-1	Erosion Control	9500	LF	$ 3.50	$ 33,250.00				$ -	9500	$ 33,250.00
107-1	Litter Removal					10	AC	$ 35.00	$ 350.00	10	$ 350.00
107-2	Mowing					10	AC	$ 46.00	$ 460.00	10	$ 460.00
110-1-1	Clearing & Grubbing	1.5	AC	$ 41,000.00	$ 61,500.00				$ -	1.5	$ 61,500.00
120-6	Embankment (regrade to swale-line (both sides))	500	CY	$ 20.14	$ 10,070.00				$ -	500	$ 10,070.00
285-701	Optional Base Group 1 (compacted surface)	10500	SY	$ 25.00	$ 262,500.00				$ -	10500	$ 262,500.00
522-1	Driveway adjustments	40	EA	$ 1,500.00	$ 60,000.00				$ -	40	$ 60,000.00
523-1-3	Patterned Pavement (crosswalk markings)	50	SY	$ 240.00	$ 12,000.00				$ -	50	$ 12,000.00
570-1-2	Sod (stabilization)	12000	SY	$ 5.00	$ 60,000.00				$ -	12000	$ 60,000.00
527-2	Detectable warnings	40	SF	$ 40.00	$ 1,600.00				$ -	40	$ 1,600.00
653-1-12	Advance Warning Pedestrian Crossing Blinker-Sign F&I	2	EA	$ 1,700.00	$ 3,400.00				$ -	2	$ 3,400.00
700-1-11	Single-Post Sign, F&I, Less than 12 SF	18	EA	$ 525.00	$ 9,450.00				$ -	18	$ 9,450.00
711-11-123	Thermoplastic, Std, Crosswalk, White, Solid, 12"	44	LF	$ 4.00	$ 176.00				$ -	44	$ 176.00
711-11-999	Thermoplastic, Pavement Markings	2	EA	$ 500.00	$ 1,000.00				$ -	2	$ 1,000.00
1644-A	Utility adjustments and Drainage (pipe and structures)	1	LS	$ 100,000.00	$ 100,000.00				$ -	1	$ 100,000.00
		Funds for Construction (Phase 58)			$ 734,946.00	Local Funds for Construction (Phase 58)			$ 810.00	Subtotal	$ 735,756.00
FDOT IN-HOUSE DESIGN SUPPORT (Phase 31) **(REQUIRED)**		1	LS	$5,000	$ 5,000.00	FDOT In-House Support must be included as an FHWA Participating Item					
ADDITONAL FDOT IN-HOUSE DESIGN SUPPORT FOR CRITICAL PROJECTS					$ -						
FDOT IN-HOUSE CONSTRUCTION SUPPORT (Phase 61) **(REQUIRED)**		1	LS	$5,000	$ 5,000.00						
ADDITONAL FDOT IN-HOUSE CONSTRUCTION SUPPORT FOR CRITICAL PROJECTS					$ -						
LOCAL FUNDS FOR DESIGN		Local Agency Design Work is not a FHWA Participating Item				1	LS	10%	$ 73,575.60		
CONTINGENCY (Phase 58) **(REQUIRED)**		Contingency is not a FHWA Participating Item				1	LS	5%	$ 36,787.80		
TRANSIT RELATED PROJECTS (10% FTA ADMINISTRATIVE FEE)		Administrative Fee is not a FHWA Participating Item							$ -		
CONSTRUCTION ENGINEERING & INSPECTION ACTIVITIES (CEI) (Phase 68)						1	LS	12%	$ 88,290.72		
FDOT OVERSIGHT CEI (3% OF TOTAL CONSTRUCTION COST ESTIMATE) (Phase 62) **(REQUIRED)**		0	LS	3%	$ 22,072.68	FDOT In-House Support must be included as an FHWA Participating					
					$ 767,018.68				**$ 199,464.12**		**$ 966,482.80**
					Subtotal FHWA Participating				**Subtotal FHWA Non-Participating**		**Total Construction Cost Estimate**

*Costs shown based on FDOT Statewide Item Average Unit Cost from 2022/06/01 to 2022/11/30 (Costs not included on FDOT Average Unit Costs taken from recent local contractor estimates)
*Projects on the State Highway System and Critical Projects **SHALL** utilize FDOT pay items numbers and descriptions.

Non-participating items:
- Mowing & Litter removal
- Engineering work; Optional services; Survey; Video inspection; MOT plans preparation; As-builts/record drawings
- Utility work -- this includes, but is not limited to: valve adjustments, utility relocations, FPL power pole relocations, AT&T directional bore, etc...
- Contingency

Other elements may be non-participating; the ones listed above are the commonly used pay items that are non-participating.
- Existing 5-foot wide asphalt sidewalk. All sidewalk deficiencies and obstructions shall be removed and replaced.

Line Item Notes:
- Mobilization includes root barrier.
- Embankment (regrade to swale-line (both sides)) is the pay item intended to cover all the swale rework along the proposed sidewalk layout.
- Driveway adjustments include culverts and must comply with ITID Standards.
- Patterned Pavement Crosswalks shall be at paved side-road intersections on both sides of the road. Unpaved roads with an existing paved apron will receive Thermoplastic White Crosswalk Striping.

If you have any questions regarding an eligible or non-participating item, please contact the District Four Local Program Unit.

Thank you!

Prepared by: Joseph W. Capra, PE **Name:** **Signature:** **PE Number:** 37638 **Date:** 1/18/2023

JOSEPH W. CAPRA
LICENSE
PE 37638
STATE OF
FLORIDA
PROFESSIONAL ENGINEER

EXISTING COUNTY THOROUGHFARE
92 AGREEMENT
95 AGREEMENT
ITID BOUNDARY

NOTES:
1. ALL UNSHADED AREAS BETWEEN LOT LINES ARE OWNED BY ADJACENT PROPERTY OWNERS WITH EASEMENTS DEDICATED TO ITID.
2. THIS DRAWING IS PICTORIAL, NOT INTENDED TO REPRESENT SURVEY INFORMATION
3. NORTHLAKE BLVD. EAST OF GRAPEVIEW IN 1992 AGREEMENT BUT ITID DID NOT HAVE EASEMENTS.
4. COCONUT BLVD NORTH OF HAMLIN BLVD IN 1992 AGREEMENT BUT ITID DID NOT HAVE EASMENTS

NO.	DATE	REMARKS	BY

REVISIONS

Stormwater Engineering, Inc.
Civil, Hydrologic & Hydraulic Engineers
1855 Indian Road, Suite 202, West Palm Beach, FL 33409
Ph (561)242-0028 • Fax (561)242-0109 • stormj@bellsouth.com

INDIAN TRAIL IMPROVEMENT DISTRICT
EASEMENT MAP

©COPYRIGHT 2006 By Stormwater Engineering, Inc. This Drawing Is Provided For Informational Purposes Only Unless Signed And Sealed By An Authorized Professional Engineer Representing Stormwater Engineering, Inc. C.A. 00009484

Jay G. Foy P.E. License #32053

El_Easement Map.dwg

4/17/2008 10:34 AM

DATE	1/25/06
DRAWN	RKL
CHECKED (1)	
CHECKED (2)	
PROJECT MANAGER	Jay G. Foy

SHEET 1 OF 1

JOB NO. 91084.000

Stormwater Engineering, Inc.

Indian Trail Improvement District
Palm Beach County, Florida

Legend

- Legislative Boundary

Roads

- FDOT
- Indian Trail
- Municipal
- Palm Beach County
- Private
- Seminole

Canals

- Indian Trail
- SFWMD
- Seminole
- West Palm Beach

Indian Trail Improvement District
Legislative Boundaries Statistics

Square Miles = 88.4

Total Roads = 602.4 Miles
Total Canals = 193.7 Miles

ITID Roads = 458.6 Miles
ITID Canals = 164.2 Miles

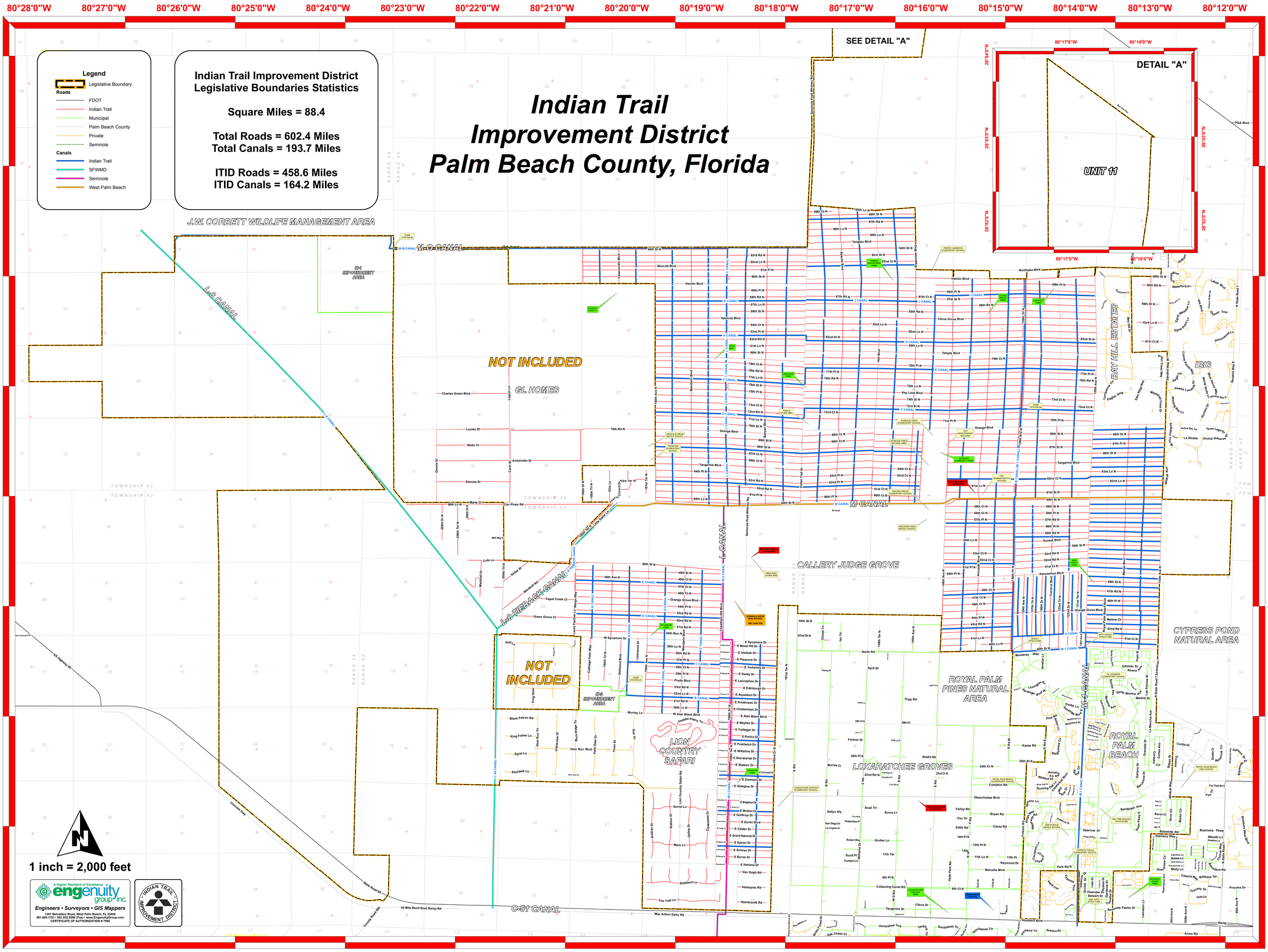

A Higher Standard of Excellence
engenuity group inc.
Engineers • Surveyors • GIS Mappers
1231 Belvedere Road, West Palm Beach, FL 33405
561.686.1151 • 561.832.9390 (Fax) • www.EngenuityGroup.com
CERTIFICATE OF AUTHORIZATION # 7095

INDIAN TRAIL IMPROVEMENT DISTRICT

TRANSPORTATION PLANNING AGENCY
TRANSPORTATION ALTERNATIVE PROGRAM
PUBLIC OUTREACH

2023 Local Initiatives Program Outreach Letter

Online Survey Screenshot

Outreach Address List for 61st Street N. and 140th Boulevard

INDIAN TRAIL
IMPROVEMENT DISTRICT
EST. 1957

February 8, 2023

Board of Supervisors

Michael Johnson,
President

Betty Argue,
Vice President

Elizabeth Accomando,
Treasurer

Patricia Farrell,
Secretary

Keith Jordano,
Assistant Secretary

District Staff

Burgess Hanson,
Executive Director

Mary Viator,
District Attorney

Jay Foy,
District Engineer

RE: 2023 Transportation Alternative (TA) Grant
Multi-Use Trail and Sidewalk Widening

Dear Resident:

Connecting District Parks with safe and ADA compliant multi-use non-motorized pathways and sidewalks has been a goal for the Indian Trail Improvement District Board Members. Therefore, the District is submitting an application to the Palm Beach County TPA requesting $767,018 for the development of a project along several of the District roadways.

This project will consist of widening the any existing sidewalk from five (5) feet to eight (8) feet wide. On the opposite side of the road from the sidewalk, a eight (8) foot-wide multi-use pathway that can accommodate a wide range of non-motorized uses (including walkers, joggers, bicyclists and wheelchairs) will be constructed. Please be re-assured the multi-use pathway and widened sidewalk will be 100 percent in the District easement; therefore, no private property will be taken.

The 1.8 mile project will include sections on 140th Avenue North from Orange Boulevard to 61st Street N, and 61st Street North from 140th Avenue North to the M-1 Canal. In addition to providing increased access for the residents of the community, the project will also further the adopted District-wide mobility plan. A map identifying the proposed project areas is included with this correspondence.

If awarded the funding from the TPA and FDOT, construction of the project would not occur until 2027. However, as part of the application process, the District wanted to provide residents living in the project area the opportunity to provide input and/or ask District staff any questions about the project or grant process. Please contact the District at LAPrc@indiantrail.com for more information about the project.

For your convenience, scan the QR Code below for the survey to voice your support/objection of the project (only two responses per address).

Indian Trail Improvement District
www.indiantrail.com
13476 61st Street | West Palm Beach | Florida | 33412
Office: 561.793.0874 | Fax: 561.793.3716

If you cannot use the QR Code below, the Survey can also be found on the District website homepage www.indiantrail.com.

Sincerely,

Burgess Hanson
Executive Director

2023 TRANSPORTATION ALTERNATIVE
(TA) GRANT SURVEY

Indian Trail Improvement District
www.indiantrail.com
13476 61st Street | West Palm Beach | Florida | 33412
Office: 561.793.0874 | Fax: 561.793.3716

Granicus - Peak Agenda | Indian Trail Improvement District | https://myapps.paychex.com/log

https://www.indiantrail.com/home

INDIAN TRAIL | HOME | ABOUT US | HOW DO I... | BOARD MEMBERS | DEPARTMENTS

NEWS AND INFORMATION

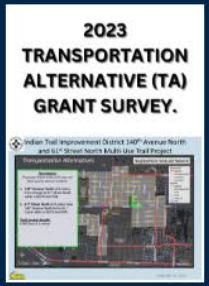

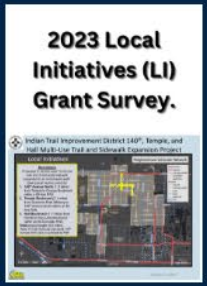

MEETINGS/EVENTS

76°F Sunny | Search | 5:50 PM 2/9/2023

Indian Trail Improvement District Multi-use Trail Project
Public Outreach List

Owner Name	Owner Name 2	Mailing 1	City State & Zip	Site Address
WRIGHT ADAM C &	WRIGHT COURTNEY E	13255 61ST ST N	WEST PALM BEACH FL 33412 1916	13255 61ST ST N
** CONFIDENTIAL RECORD PER FS-119.071 **	** CONFIDENTIAL	** CONFIDENTIAL		13306 61ST ST N
INDIAN TRAIL IMPROVEMENT DIST LESSOR	PBC FIRE RESCUE	13476 61ST ST N	WEST PALM BEACH FL 33412 1915	6085 AVOCADO BLVD
JONASSAINT LUGDIE M		14842 69TH ST N	LOXAHATCHEE FL 33470 5336	13126 61ST ST N
HATCH NICHOLAS H &	HATCH ERIN S	13433 61ST ST N	WEST PALM BEACH FL 33412 1916	13433 61ST ST N
PARNELL DAVID P JR		13347 61ST ST N	WEST PALM BEACH FL 33412 1916	13347 61ST ST N
FLYNN KENNETH E &	FLYNN DONNA M	13521 61ST ST N	WEST PALM BEACH FL 33412 1916	13521 61ST ST N
CHIN BARBARA		13217 61ST ST N	WEST PALM BEACH FL 33412 1916	13217 61ST ST N
** CONFIDENTIAL RECORD PER FS-119.071 **	** CONFIDENTIAL	** CONFIDENTIAL		13169 61ST ST N
QUINT THOMAS R &	QUINT MICHELLE L	13348 61ST ST N	WEST PALM BEACH FL 33412 1915	13348 61ST ST N
ABATE ROBERT	ABATE MARSHA C	13060 61ST ST N	WEST PALM BEACH FL 33412 1915	13060 61ST ST N
KUSCH LARRY		13170 61ST ST N	WEST PALM BEACH FL 33412 1915	13170 61ST ST N
WEINDORF BRIAN S &	WEINDORF LISA M	13386 61ST ST N	WEST PALM BEACH FL 33412 1915	13386 61ST ST N
CALDERON ISMAEL &	GUASTELLO LISA M	13436 61ST ST N	WEST PALM BEACH FL 33412 1915	13436 61ST ST N
SAINT VAL JUNIOR SERGE &	SAINT VAL AMANDA	13303 61ST LN N	WEST PALM BEACH FL 33412 1949	13303 61ST ST N
ROLLINS JAMES R &	BAUMER MALINDA A	13216 61ST ST N	WEST PALM BEACH FL 33412 1915	13216 61ST ST N
WELSH MARK D &	WELSH CHARLENE R	13127 61ST ST N	WEST PALM BEACH FL 33412 1916	13127 61ST ST N
SORIANO MARTHA C		1008 NE 32ND ST	BELLE GLADE FL 33430 2381	
INDIAN TRAIL IMPROVEMENT DISTRICT		13476 61ST ST N	WEST PALM BEACH FL 33412 1915	13476 61ST ST N
RUBINACCI ALESSANDRO &	RUBINACCI EVELYNE	13475 61ST ST N	WEST PALM BEACH FL 33412 1916	13475 61ST ST N
PICKETT KENDALL L &	PICKETT AUDREY M	322 SEAGROVE ST	SHOREACRES TX 77571 7359	
** CONFIDENTIAL RECORD PER FS-119.071 **	** CONFIDENTIAL	** CONFIDENTIAL		13256 61ST ST N
CASTRO ANDREA &	MIOT BRIAN	13744 61ST ST N	WEST PALM BEACH FL 33412 1907	13744 61ST ST N
BENNETT ROBERT SR &	BENNETT CATHERINE	13829 61ST ST N	WEST PALM BEACH FL 33412 1908	13829 61ST ST N
VACHIER PEDRO JR &	MERCADO AIXA	13786 61ST ST N	WEST PALM BEACH FL 33412 1907	13786 61ST ST N
LOHMAN JONATHAN &	LOHMAN JULIE	13876 61ST ST N	WEST PALM BEACH FL 33412 1907	13876 61ST ST N
CAMPBELL KERRY D	CAMPBELL KERRY D TR	13916 61ST ST N	WEST PALM BEACH FL 33412 1907	13916 61ST ST N
DREXLER KYLE L &	DREXLER JESSICA R	13698 61ST ST N	WEST PALM BEACH FL 33412 1907	13698 61ST ST N
OPENDOOR PROPERTY TRUST I		410 N SCOTTSDALE	TEMPE AZ 85288 0976	13875 61ST ST N
KENNEDY GARY W		13697 61ST ST N	WEST PALM BEACH FL 33412 1908	13697 61ST ST N
CUSATI TOMAS TRUST	CUSATI TOMAS TR	1115 E 13TH ST	BROOKLYN NY 11230 4817	6090 140TH AVE N
ALEXANDER AARON R &	ALEXANDER SHARON A	13653 61ST ST N	WEST PALM BEACH FL 33412 1908	13653 61ST ST N
PEREZ BARBARA		13567 61ST ST N	WEST PALM BEACH FL 33412 1908	13567 61ST ST N
RODRIGUEZ AIDEZ		13828 61ST ST N	WEST PALM BEACH FL 33412 1907	13828 61ST ST N
GOMEZ CARMENZA		13785 61ST ST N	WEST PALM BEACH FL 33412 1908	13785 61ST ST N
DONAWA MERLE E		13656 61ST ST N	WEST PALM BEACH FL 33412 1907	13656 61ST ST N
LEE DAVID F &	LEE CHERYL ANN	13611 61ST ST N	WEST PALM BEACH FL 33412 1908	13611 61ST ST N

Owner Name	Owner Name 2	Mailing 1	City State & Zip	Site Address
RAKOFF MARY A		13612 61ST ST N	WEST PALM BEACH FL 33412 1907	13612 61ST ST N
BROWN JOSEPH P		13917 61ST ST N	WEST PALM BEACH FL 33412 1908	13917 61ST ST N
MURRAY GLEN		13743 61ST ST N	WEST PALM BEACH FL 33412 1908	13743 61ST ST N
NAVAS CARLOS A &	NAVAS ROSA C	13949 61ST ST N	WEST PALM BEACH FL 33412 1908	13949 61ST ST N
KAILIK KATHARINE		419 GOLDEN ISLES	HALLANDALE FL 33009 7580	
ADKINS DOREEN G		6760 140TH AVE N	WEST PALM BEACH FL 33412 1901	6760 140TH AVE N
LANDY EDWIN G &	LANDY KIMBERLY	6658 140TH AVE N	WEST PALM BEACH FL 33412 1962	6658 140TH AVE N
KOVI TODD J		13950 66TH ST N	WEST PALM BEACH FL 33412 1925	13950 66TH ST N
SANTANA BEATRIS		17496 50TH ST N	LOXAHATCHEE FL 33470 3535	
LOPEZ JOSE &	LOPEZ MICHELLE A	6896 140TH AVE N	WEST PALM BEACH FL 33412 1979	6896 140TH AVE N
WILLIAMS DOUGLAS &	WILLIAMS CHERYL	1010 PARKHILL DR	WEST PALM BEACH FL 33417 5700	
LAWRACY ROBERT &	ORFANOS MICHELLE P	13957 TANGERINE	WEST PALM BEACH FL 33412 1930	13957 TANGERINE BLVD
MOHAMED SHAMEER H		13963 67TH ST N	WEST PALM BEACH FL 33412 1959	13963 67TH ST N
FERNANDEZ EDDY N		13962 68TH ST N	WEST PALM BEACH FL 33412 1903	13962 68TH ST N
JONES BRIAN		13918 61ST LN N	WEST PALM BEACH FL 33412 1939	13918 61ST LN N
BRYNES KAREN		13950 TANGERINE	WEST PALM BEACH FL 33412 1929	13950 TANGERINE BLVD
VERGARA ALBERTO &	VERGARA ERICKA D	13948 63RD LN N	WEST PALM BEACH FL 33412 1911	13948 63RD LN N
ROJAS DERIK &	ROJAS NEIL	13920 62ND CT N	WEST PALM BEACH FL 33412 1976	13920 62ND CT N
CLARK VANESSA		13950 61ST LN N	WEST PALM BEACH FL 33412 1939	13950 61ST LN N
KING ALEXANDRIA M &	KING GEORGE GLENN JR	13949 61ST LN N	WEST PALM BEACH FL 33412 1940	13949 61ST LN N
BROWN JOSEPH P		13917 61ST ST N	WEST PALM BEACH FL 33412 1908	13917 61ST ST N
NAVAS CARLOS A &	NAVAS ROSA C	13949 61ST ST N	WEST PALM BEACH FL 33412 1908	13949 61ST ST N
ROBINSON PHILLIP &	ROBINSON DEBORAH	6264 140TH AVE N	WEST PALM BEACH FL 33412 1972	6264 140TH AVE N
MARTINEZ CHANNA		13951 62ND CT N	WEST PALM BEACH FL 33412 1977	13951 62ND CT N
MORRIS CHARLES A &	MORRIS ALTHEA	13947 63RD LN N	WEST PALM BEACH FL 33412 1912	13947 63RD LN N
DE LARA MARIA		13919 61ST ST N	WEST PALM BEACH FL 33412 1908	13919 61ST LN N

RESOLUTION NO. 2023-002

RESOLUTION OF THE INDIAN TRAIL IMPROVEMENT DISTRICT AUTHORIZING AND DIRECTING THE DISTRICT EXECUTIVE DIRECTOR TO SUBMIT AN APPLICATION FOR FINANCIAL ASSISTANCE PURSUANT TO THE PALM BEACH TRANSPORTATION PLANNING AGENCY (TPA) TRANSPORATION ALTNERNATIVE PROGRAM FOR FUNDING FOR A PROPOSED TRANSPORTATION PROJECT; AGREEING TO FUND THE LOCAL SHARE OF PROJECT AND THE ONGOING MAINTENANCE AND OPERATIONS EXPENSES ASSOCIATED WITH THE PROJECT; AND PROVIDING FOR AN EFFECTIVE DATE.

WHEREAS, the INDIAN TRAIL IMPROVEMENT DISTRICT ("DISTRICT") is eligible to apply for funding in an amount not to exceed $1 Million from the TPA Transportation Alternative Program ("TA"); and

WHEREAS, the District desires to make improvements to: 140th Avenue N. and 61st Street N. to accomplish extending the installation of new 8-foot wide Multi-Use Trails along the road (the Project). See attached Map; and

WHEREAS, the Project will be constructed completely within right-of-way owned by the District; and

WHEREAS, eligible construction costs associated with the Project to be funded by the TA is estimated at $767,018; and

WHEREAS, the District's share of the Project's cost, which will cover design and construction management, is estimated at $199,464; and

WHEREAS, if the Project is funded by the TPA, the DISTRICT agrees to appropriate such funds as may be necessary to design the Project, to manage the construction of the Project, to cover increases in construction costs with local funds, and to be reimbursed for eligible construction costs associated with the Project; and

WHEREAS, the District will administer the Project through a LAP Agreement to construct the Project; and

WHEREAS, after construction of the Project, the DISTRICT agrees to appropriate such funds as may be necessary for the continued operation and maintenance of the Project.

NOW THEREFORE, BE IT RESOLVED THAT:

1. The foregoing recitals are incorporated herein as true and correct findings of the DISTRICT.
2. The DISTRICT hereby directs and authorizes the Executive Director to submit an application for the TA to the TPA for the funding of the Project.
3. The DISTRICT agrees to appropriate such funds as may be necessary to design the Project, to manage the construction of the project, and to support the continued operation and maintenance of the Project.
4. This Resolution shall take effect upon adoption.

The foregoing Resolution was offered by Supervisor Jordano who moved its adoption. The motion was seconded by Supervisor Accomando, and upon being put to a vote. the motion passed unanimously. The PRESIDENT, BOARD OF SUPERVISORS thereupon declared the Resolution duly adopted this 25th day of January, 2023.

INDIAN TRAIL IMPROVEMENT DISTRICT PALM BEACH COUNTY FLORIDA SEAL

District Seal

INDIAN TRAIL IMPROVEMENT DISTRICT
BOARD OF SUPERVISORS

BY: _____
Michael Johnson, President

ATTEST:

_____
Patricia Farrell, Secretary

Indian Trail Improvement District 140th Avenue North and 61st Street North Multi-Use Trail Project

Transportation Alternatives

Description

Proposed 8-foot-wide multi-use trail. (See typical section exhibits).

1. **140th Avenue North** (0.9 miles) from Orange to 61st Street North within a 60/70-foot R/W.

2. **61st Street North** (0.9 miles) from 140th Avenue North to the M-1 Canal within a 60/70-foot R/W.

Total project length:
9,500 feet (1.8 miles)

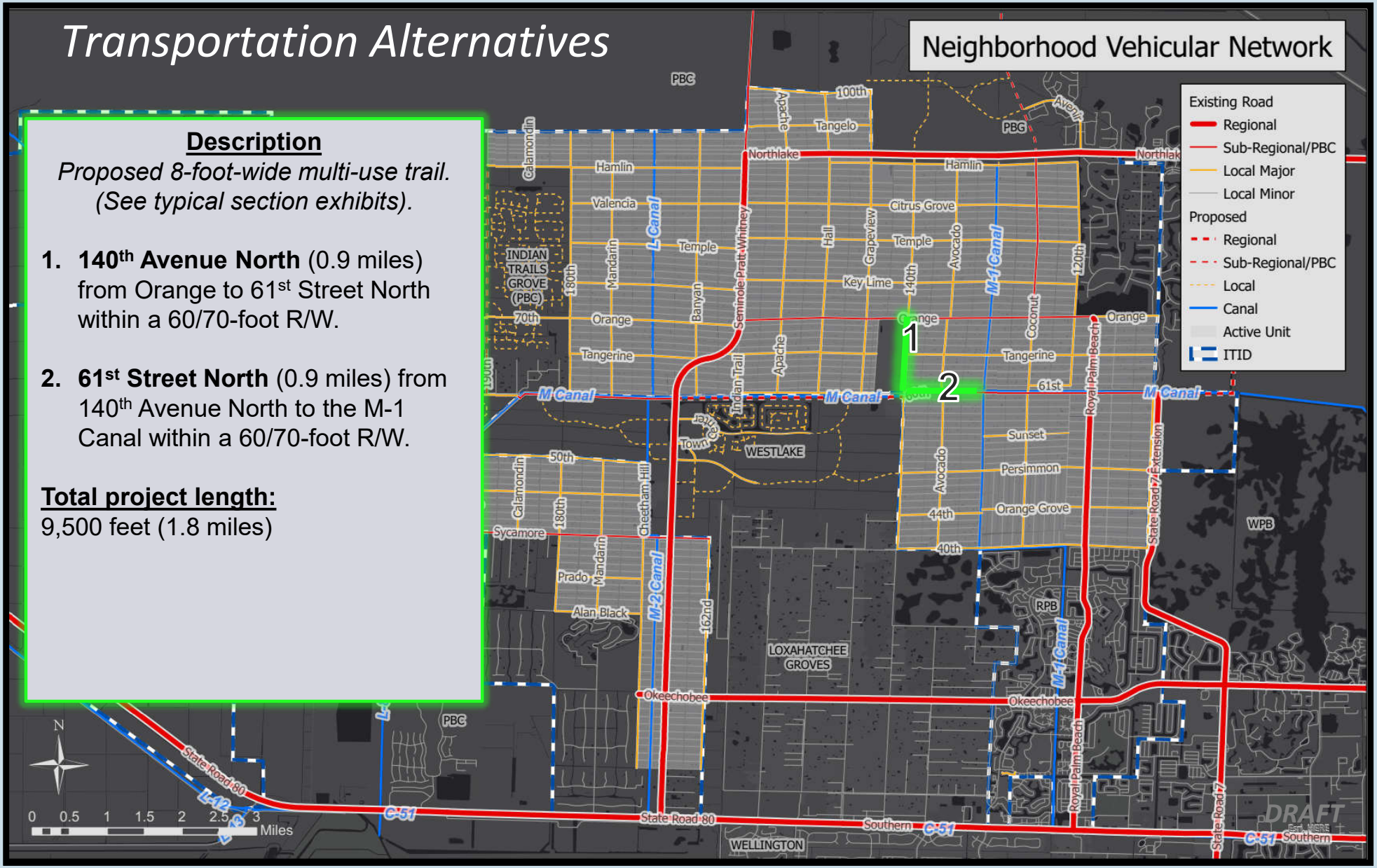

JANUARY 17, 2023

#1 - 140th Avenue North from Orange Blvd to 61st Street North

#1 - 140th Ave N & Orange Blvd Facing South

#1 - 140th Ave N & 61st Street N Facing North

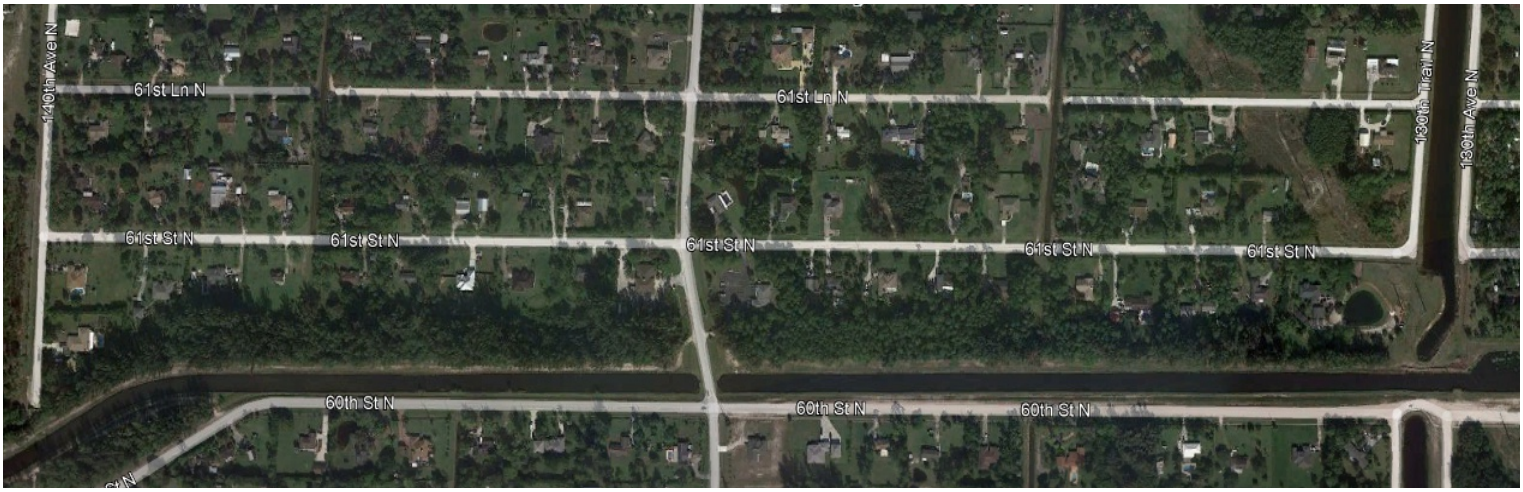

#2 - Aerial 61st Street North from 140th Ave N to the M-1 Canal

#2 - 61st St N & 140th Street North Facing East

#2 - 61st Street N & M-1 Canal Facing West

#2 - 61st Street N & M-1 Canal Facing East